Natural Gas Sweetening
DEA Absorption Simulation

A Technical Simulation Report

Prepared Using

Aspen HYSYS V14

Prepared by

Shahriar Hossain Suny

Department of Chemical Engineering

Student ID: 220539

Jashore University of Science and Technology (JUST), Bangladesh

AIChE Member ID: 009905932744

GitHub: Shahriar Hossain Suny

LinkedIn: Shahriar Hossain Suny

Email

Table of Contents

ABSTRACT 5
1. INTRODUCTION 5
1.1 Background 5
1.2 Objectives 6
1.3 Scope 6
2. PROCESS DESCRIPTION 6
2.1 Overview 6
2.2 Feed Conditioning and Absorption (T-100) 6
2.3 Flash Depressurisation 7
2.4 Solvent Regeneration (T-101) 7
2.5 Lean Amine Recirculation 8
3. SIMULATION BASIS 8
3.1 Software and Thermodynamic Framework 9
3.2 Feed Gas Specification 9
3.3 Solvent Specification 10
3.4 Equipment Configuration 10
3.5 Convergence 11
4. RESULTS AND DISCUSSION 12
4.1 Overall Process Performance 12
4.2 Complete Stream Table 13
4.3 Feed and Product Composition Comparison 14
4.4 Absorber Column Profile (T-100) 15
4.5 Regenerator Column Profile (T-101) 16
5. ENERGY ANALYSIS 17
5.1 Energy Stream Summary 17
5.2 Reboiler Duty Analysis 18
5.3 Heat Recovery Assessment 18
5.4 Pump Energy 19
5.5 Utility Consumption Summary 19
6. SENSITIVITY ANALYSIS 20
6.1 Rationale 20
6.2 Effect of Lean Amine Circulation Rate 20
6.3 Effect of Reboiler Duty on Lean Amine Quality 21

6.4 Absorber Stage Count Sensitivity 22
6.5 Recommendations for Quantitative Sensitivity Studies 22
7. CONCLUSION 23
REFERENCES 24
APPENDIX A — Simulation Convergence Confirmation 24
APPENDIX B — Thermodynamic Package Selection Justification 25
APPENDIX C — Nomenclature 25

ABSTRACT

Natural gas sweetening is a critical upstream processing operation required to meet pipeline quality specifications by removing hydrogen sulphide (H_2S) and carbon dioxide (CO_2) from raw gas streams. This paper presents the steady-state process simulation of a natural gas sweetening unit using diethanolamine (DEA) as the chemical solvent, developed in Aspen HYSYS Version 14 with the Acid Gas — Chemical Solvents thermodynamic property package. The simulation models a complete absorption-regeneration loop processing a sour gas feed of 1,244 kgmole/h at 32.22°C and 6,893 kPa, containing 1.74 mol% H_2S and 4.18 mol% CO_2. The absorber (T-100) operates across 20 equilibrium stages at high pressure; the regenerator (T-101) operates across 18 stages at 241–262 kPa with a reboiler temperature of 131.3°C. H_2S is reduced to effectively zero in the sweet gas product. The regenerator reboiler duty is 14,700,000 kJ/h and the condenser duty 4,751,000 kJ/h, which together represent the dominant energy consumers in the process. Lean amine circulation is maintained at 1,901 kgmole/h at 40.56°C. The simulation delivers a complete mass- and energy-balanced process model with full stream table documentation, column stage profiles, and energy stream data, and serves as a baseline for energy optimisation and process intensification work.

1. INTRODUCTION

1.1 Background

Natural gas extracted from subsurface reservoirs frequently contains acid gases — principally H_2S and CO_2 — at concentrations that disqualify it from direct pipeline transport or end use. H_2S is acutely toxic above 10 ppm and corrodes carbon steel pipelines in the presence of moisture. CO_2 is less immediately hazardous but reduces heating value, promotes corrosion, and can cause hydrate formation in transmission systems. Pipeline quality standards typically require H_2S below 4 ppm (0.25 grains per 100 SCF) and CO_2 below 2 mol%, so dedicated acid gas removal upstream of any sales gas network is non-negotiable.

Amine-based chemical absorption is the dominant technology for this task, accounting for the majority of installed sweetening capacity across the oil and gas industry. The process exploits the reversible chemical reaction between alkanolamines and acid gases: absorption at high pressure and low temperature, regeneration at low pressure and elevated temperature, running continuously in steady state. Among the commercial alkanolamines, DEA sits between the more reactive but degradation-prone monoethanolamine (MEA) and the slower but more selective methyldiethanolamine (MDEA). For feeds with moderate H_2S and CO_2

concentrations, DEA offers a workable balance of absorption capacity, regeneration energy, and solvent stability.

1.2 Objectives

This project builds a rigorous steady-state simulation of a DEA-based natural gas sweetening unit in Aspen HYSYS Version 14. The specific objectives are: to model the complete absorption-regeneration loop including all auxiliary equipment; to obtain converged mass and energy balances across all process streams; to document absorber and regenerator stage profiles; and to quantify key performance metrics including H_2S removal efficiency, amine circulation rate, and utility energy consumption. The simulation provides a validated process model to serve as a baseline for energy optimisation, solvent comparison studies, and sensitivity analysis.

1.3 Scope

The simulation scope runs from the sour gas inlet through the sweet gas outlet, covering the absorber column (T-100), flash drum (V-100), regenerator column (T-101), lean/rich amine heat exchangers (E-100, E-101, E-102), flash vessel (V-101), pumps (P-100, P-101), control valves (VLV-100, VLV-101), and the amine makeup system. The thermodynamic framework is the Acid Gas — Chemical Solvents property package in HYSYS, which uses the Kent-Eisenberg model with extended NRTL activity coefficient corrections developed specifically for amine-acid gas systems — the industry-standard choice for this class of simulation.

2. PROCESS DESCRIPTION

2.1 Overview

The simulated sweetening unit follows the standard absorption-regeneration configuration used in industrial amine treating plants. The process divides into four functional subsystems: feed conditioning and absorption, flash depressurisation, solvent regeneration, and lean amine recirculation. Figure 1 shows the complete process flow diagram generated in Aspen HYSYS Version 14.

2.2 Feed Conditioning and Absorption (T-100)

Sour natural gas enters as stream S1 at 32.22°C and 6,893 kPa with a molar flow of 1,244 kgmole/h. The feed is predominantly methane (88.00 mol%) with 1.74 mol% H_2S and 4.18 mol% CO_2, plus heavier hydrocarbon fractions including ethane (3.98 mol%), propane (0.94 mol%), and minor C4–C6 components.

Stream S1 combines with a small water recycle stream (W) at mixer SAT-100, producing the combined absorber feed (S2) at effectively the same conditions. The mixed feed enters the bottom of absorber column T-100 — a 20-stage countercurrent column operating between 6,844 kPa at the top and 6,900 kPa at the bottom. Lean DEA solution (DEA1) enters at the top stage at 40.56°C and 6,844 kPa with a molar flow of 1,901 kgmole/h, containing 6.25 mol% DEA in aqueous solution.

As the gas rises countercurrently against the descending liquid, H_2S and CO_2 react chemically with DEA. The exothermic absorption reactions produce a temperature rise across the column — from 40.67°C at Stage 1 to 64.12°C at Stage 20 — which reflects the acid gas loading profile and heat of reaction. Sweet gas leaves the absorber overhead as stream S3 at 40.67°C with H_2S effectively removed, then passes through separator V-100 and heat exchanger E-100 to produce the final sweet gas product S5. Rich amine — DEA loaded with absorbed H_2S and CO_2 — exits the absorber bottom as stream DEA2 at 64.10°C and 6,900 kPa with a molar flow of 1,976 kgmole/h.

2.3 Flash Depressurisation

Rich amine stream DEA2 passes through control valve VLV-100, reducing pressure to 1,032 kPa to produce stream DEA3. This flash step liberates dissolved hydrocarbons — principally methane — co-absorbed under high absorber pressure. The two-phase mixture enters flash vessel V-101, where the vapour phase (V1), containing predominantly methane (63.12 mol%), H_2S (9.53 mol%), and CO_2 (18.43 mol%), is separated and routed to MIX-100. The liquid phase (DEA5) exits at 64.79°C and 446.1 kPa and carries the bulk of the acid gas load forward to the regenerator.

2.4 Solvent Regeneration (T-101)

The rich amine is preheated through lean/rich cross-exchanger E-101 before entering regenerator T-101 at Stage 4. The regenerator is an 18-stage stripping column at 241–262 kPa, equipped with a condenser and reboiler. The condenser operates at 45.05°C with a duty of 4,751,000 kJ/h and a reflux ratio of 1.343, condensing water vapour and returning it as reflux to maintain the amine-water balance. The reboiler operates at 131.3°C and 262.0 kPa with a duty of 14,700,000 kJ/h and a boilup ratio of 0.1954, supplying the thermal energy needed to reverse the absorption reactions and drive acid gas out of the solvent.

The regenerator temperature rises from 109.6°C at Stage 1 to 130.9°C at Stage 18 and 131.3°C at the reboiler. Acid gas and steam exit overhead as vapour stream V2 at 45.05°C and 241.3 kPa, containing 28.07 mol% H_2S and 67.71 mol% CO_2, for

downstream disposal or sulphur recovery. Regenerated lean amine exits the reboiler as stream DEA7 at 131.3°C.

2.5 Lean Amine Recirculation

Regenerated lean amine at 131.3°C passes through cross-exchanger E-101 — recovering heat to the incoming rich amine — and is further cooled in trim cooler E-102 before pump P-100 raises its pressure back to absorber conditions. The cooled, pressurised lean amine rejoins the amine makeup loop through mixer MAKEUP-100, which receives fresh DEA makeup (DEA MU 1) and water makeup (WATER MU 1) to compensate for solvent losses through the purge stream (PURGE 1). The combined lean amine stream DEA12 at 40.56°C and 6,844 kPa with a molar flow of 1,900 kgmole/h is recycled back to the absorber top as DEA1, closing the solvent loop. Recycle convergence is handled by block RCY-1 in HYSYS; the simulation reaches full convergence, confirmed by the green convergence status on both column operations.

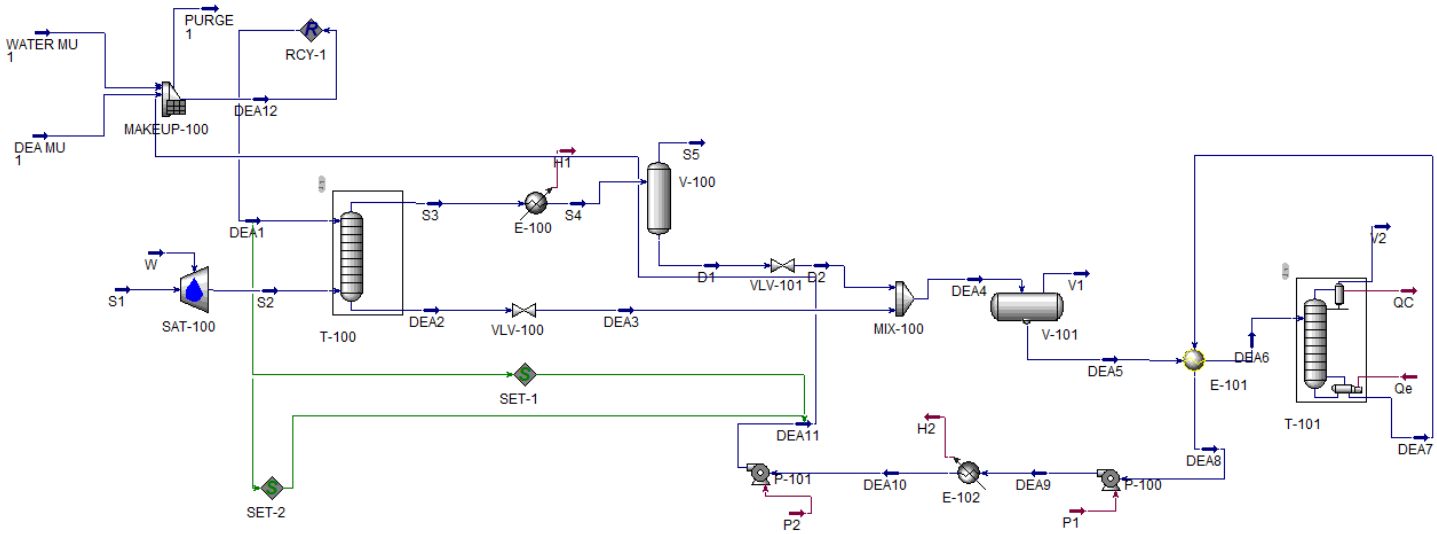

Fig: Overall Process

3. SIMULATION BASIS

3.1 Software and Thermodynamic Framework

The simulation was developed in Aspen HYSYS Version 14 (Aspen Technology Inc., Bedford, MA, USA). The Acid Gas — Chemical Solvents framework (Basis-1) was selected as the property package — the standard choice for amine-based gas treating simulations. It uses the Kent-Eisenberg equilibrium model extended with activity coefficient corrections fitted to alkanolamine-acid gas-water systems, accurately capturing the non-ideal vapour-liquid equilibria and chemical reaction equilibria governing H_2S and CO_2 absorption in DEA solutions across the relevant temperature and pressure ranges. SI10 units were applied throughout.

3.2 Feed Gas Specification

The sour gas feed is defined by stream S1, representing a typical associated natural gas composition with moderate acid gas content. The complete feed specification is given in Table 1.

Parameter	Value	Unit
Temperature	32.22	°C
Pressure	6,893	kPa
Molar flow	1,244	kgmole/h
Mass flow	23,480	kg/h
Vapour fraction	1.000	—
Methane	88.00	mol%
Ethane	3.98	mol%
Propane	0.94	mol%
i-Butane	0.26	mol%
n-Butane	0.29	mol%
i-Pentane	0.14	mol%
n-Pentane	0.12	mol%
n-Hexane	0.18	mol%
H_2S	1.74	mol%
CO_2	4.18	mol%

Parameter	Value	Unit
Nitrogen	0.16	mol%

Table 1. Sour gas feed specification (Stream S1)

3.3 Solvent Specification

Diethanolamine (DEA) was selected as the chemical solvent. The lean amine solution entering the absorber (stream DEA1) is specified in Table 2. The DEA concentration of 6.25 mol% (roughly 25–30 wt% on a molar mass basis) is consistent with industrial DEA treating practice, where concentrations of 25–35 wt% are standard — a range that balances absorption capacity against corrosion risk and solvent degradation rate.

Parameter	Value	Unit
Temperature	40.56	°C
Pressure	6,844	kPa
Molar flow	1,901	kgmole/h
Mass flow	44,610	kg/h
Vapour fraction	0.000	—
H_2O	93.71	mol%
DEAmine	6.25	mol%
H_2S (lean loading)	0.01	mol%
CO_2	0.03	mol%

Table 2. Lean amine specification (Stream DEA1)

3.4 Equipment Configuration

The major equipment items and design specifications implemented in the HYSYS simulation are summarised in Table 3.

Equipment	Tag	Type	Key Specification
Absorber	T-100	Countercurrent column	20 equilibrium stages, 6,844–6,900 kPa

Equipment	Tag	Type	Key Specification
Regenerator	T-101	Stripping column	18 stages + condenser + reboiler, 241–262 kPa
Pre-cooler / trim heater	E-100	Shell and tube exchanger	Sour gas preheat duty: H1 = 484,800 kJ/h
Lean/rich cross-exchanger	E-101	Shell and tube exchanger	Condenser duty: QC = 4,751,000 kJ/h
Lean amine cooler	E-102	Shell and tube exchanger	Duty: H2 = 9,462,000 kJ/h
Flash drum	V-100	Two-phase separator	6,844 kPa, 32.22°C
Flash vessel	V-101	Two-phase separator	446.1 kPa, 64.79°C
Rich amine pump	P-100	Centrifugal pump	Duty: 11,840 kJ/h
Lean amine pump	P-101	Centrifugal pump	Duty: 371,100 kJ/h
Pressure letdown valve	VLV-100	Control valve	6,900 → 1,032 kPa
Pressure letdown valve	VLV-101	Control valve	6,844 → 1,032 kPa
Amine makeup mixer	MAKEUP-100	Mixer	DEA + water makeup
Recycle convergence	RCY-1	Recycle block	Lean amine loop closure

Table 3. Equipment design specifications

3.5 Convergence

Both column operations reached full convergence as confirmed by HYSYS status indicators. T-100 converged with a reflux ratio of 1.628. T-101 converged with a reflux ratio of 1.343 and a boilup ratio of 0.1954. The recycle loop RCY-1 converged the lean amine circulation to within the default HYSYS tolerance without requiring manual tear stream specification.

4. RESULTS AND DISCUSSION

4.1 Overall Process Performance

The simulation achieved complete mass and energy balance closure across all unit operations. Key performance indicators are summarised in Table 4.

Parameter	Value	Unit
Sour gas feed rate	1,244	kgmole/h
Sweet gas product rate	1,169	kgmole/h
Lean amine circulation rate	1,901	kgmole/h
H_2S inlet concentration	1.74	mol%
H_2S outlet concentration (S5)	~0.00	mol%
H_2S removal efficiency	>99.9	%
CO_2 inlet concentration	4.18	mol%
CO_2 outlet concentration (S5)	~0.01	mol%
CO_2 removal efficiency	>99.7	%
Rich amine loading (H_2S)	1.727×10^{-3}	mol H_2S/mol amine
CO_2 loading (D1 stream)	1.046	mol CO_2/mol amine
H_2S composition in sweet gas	5.053×10^{-2}	ppm
Reboiler duty (Qe)	14,700,000	kJ/h
Condenser duty (QC)	4,751,000	kJ/h
Absorber temperature range	40.67 – 64.12	°C
Regenerator temperature range	45.05 – 131.3	°C

Table 4. Key performance indicators

H_2S in the sweet gas product is reduced to 5.053×10^{-2} ppm — well below the pipeline specification of 4 ppm (0.25 grains/100 SCF). CO_2 drops to trace levels, comfortably within the typical 2 mol% pipeline limit. Both removals are achieved simultaneously under the base case conditions, without any need to compromise on one to meet the other.

4.2 Complete Stream Table

Table 5 presents the full material stream summary for all major process streams, drawn directly from the HYSYS simulation output.

Stream	T (°C)	P (kPa)	Vapour Frac.	Molar Flow (kgmole/h)	Mass Flow (kg/h)
S1 (sour gas feed)	32.22	6,893	1.000	1,244	23,480
S2 (absorber inlet)	32.22	6,893	1.000	1,245	23,500
W (water recycle)	284.8	6,893	0.727	1.238	22.31
DEA1 (lean amine in)	40.56	6,844	0.000	1,901	44,610
DEA2 (rich amine out)	64.10	6,900	0.000	1,976	47,670
S3 (sweet gas absorber overhead)	40.67	6,844	1.000	1,170	20,450
S4	32.22	6,844	0.999	1,170	20,450
S5 (sweet gas product)	32.22	6,844	1.000	1,169	20,440
D1 (rich amine to VLV-101)	32.22	6,844	0.000	0.503	9.066
DEA3 (after VLV-100)	64.94	1,032	0.001	1,976	47,670
D2 (flash vapour)	33.30	1,032	0.001	0.503	9.066
DEA4	64.93	1,032	0.001	1,977	47,670
V1 (flash drum vapour)	64.79	446.1	1.000	3.578	84.89
DEA5 (rich amine to regenerator)	64.79	446.1	0.000	1,973	47,590
DEA6 (regenerator feed)	98.89	411.6	0.007	1,973	47,590
V2 (acid gas overhead)	45.05	241.3	1.000	75.39	3,025

Stream	T (°C)	P (kPa)	Vapour Frac.	Molar Flow (kgmole/h)	Mass Flow (kg/h)
DEA7 (hot lean amine)	131.3	262.0	0.000	1,898	44,560
DEA8	94.80	248.2	0.000	1,898	44,560
DEA9	94.83	446.1	0.000	1,898	44,560
DEA10	39.78	432.3	0.000	1,898	44,560
DEA11	40.56	6,844	0.000	1,898	44,560
PURGE 1	40.56	6,844	0.000	0.018	1.920
WATER MU 1	40.56	6,844	0.000	2.244	40.43
DEA MU 1	40.56	6,844	0.000	0.000	0.000
DEA12 (recycled lean amine)	40.56	6,844	0.000	1,900	44,600

Table 5. Material stream summary

4.3 Feed and Product Composition Comparison

Table 6 compares sour gas inlet and sweet gas outlet compositions, quantifying the separation achieved by the DEA absorber.

Component	S1 Sour Gas Inlet	S5 Sweet Gas Outlet	Removal
Methane	88.00	93.43	— (concentrated)
Ethane	3.98	4.23	— (concentrated)
Propane	0.94	1.00	—
i-Butane	0.26	0.28	—
n-Butane	0.29	0.31	—
i-Pentane	0.14	0.15	—
n-Pentane	0.12	0.13	—
n-Hexane	0.18	0.19	—
H_2S	1.74	~0.000	>99.9%

Component	S1 Sour Gas Inlet	S5 Sweet Gas Outlet	Removal
CO_2	4.18	~0.010	>99.7%
Nitrogen	0.16	0.17	—
H_2O	0.00	0.10	—

Table 6. Inlet vs outlet gas composition (mol%)

The hydrocarbon concentration increase in the sweet gas reflects the removal of acid gases, which made up roughly 5.92 mol% of the inlet stream. Methane rises from 88.00 mol% to 93.43 mol% — consistent with the mass balance when approximately 6 mol% of the stream has been absorbed and removed.

4.4 Absorber Column Profile (T-100)

Table 7 shows the absorber temperature and flow profiles across all 20 stages. Temperature rises from 40.67°C at the top to a peak of 74.93°C at Stage 18, then dips slightly to 64.12°C at the bottom feed stage. This mid-column temperature bulge is a recognizable feature of well-loaded DEA absorbers: the heat of absorption concentrates in the lower-middle stages where acid gas loading is highest.

Stage	Temperature (°C)	Pressure (kPa)	Net Liquid (kgmole/h)	Net Vapour (kgmole/h)
1 (top)	40.67	6,844	1,903.6	—
2	40.73	6,847	1,903.7	1,172.4
3	40.79	6,850	1,903.8	1,172.5
4	40.88	6,853	1,903.9	1,172.6
5	41.01	6,856	1,904.1	1,172.7
6	41.19	6,859	1,904.3	1,172.9
7	41.45	6,862	1,904.7	1,173.1
8	41.82	6,865	1,905.2	1,173.5
9	42.35	6,868	1,905.9	1,174.0
10	43.10	6,871	1,906.8	1,174.6
11	44.21	6,873	1,908.2	1,175.6

Stage	Temperature (°C)	Pressure (kPa)	Net Liquid (kgmole/h)	Net Vapour (kgmole/h)
12	45.84	6,876	1,910.2	1,177.0
13	48.31	6,879	1,913.4	1,179.0
14	52.04	6,882	1,918.4	1,182.1
15	57.48	6,885	1,926.8	1,187.2
16	64.44	6,888	1,939.4	1,195.6
17	71.08	6,891	1,954.0	1,208.2
18	74.93	6,894	1,965.5	1,222.8
19	73.94	6,897	1,971.9	1,234.3
20 (bottom)	64.12	6,900	—	1,240.7

Table 7. Absorber T-100 stage profile

Liquid flow increases progressively from 1,903.6 kgmole/h at the top to 1,971.9 kgmole/h approaching the bottom, as acid gas mass transfers from the vapour phase into the liquid amine. Vapour flow falls correspondingly from 1,240.7 kgmole/h at the bottom to 1,172.4 kgmole/h at Stage 2, accounting for the transferred acid gas load.

4.5 Regenerator Column Profile (T-101)

Table 8 presents the regenerator stage profile. Temperature jumps from 45.05°C at the condenser to roughly 110°C at Stage 1, then increases gradually through the stripping section to 130.9°C at Stage 18 and 131.3°C at the reboiler. Most of the stripping work occurs in the upper stages; the lower stages hold a near-constant temperature close to the reboiler.

Stage	Temperature (°C)	Pressure (kPa)	Net Liquid (kgmole/h)	Net Vapour (kgmole/h)
Condenser	45.05	241.3	101.3	—
1	109.6	241.3	113.3	176.6
2	111.1	242.5	113.6	188.7
3	111.3	243.7	113.2	189.0

Stage	Temperature (°C)	Pressure (kPa)	Net Liquid (kgmole/h)	Net Vapour (kgmole/h)
4 (feed)	113.7	244.9	2,142.5	188.6
5	121.9	246.2	2,193.7	244.6
6	125.5	247.4	2,221.3	295.8
7	127.2	248.6	2,236.4	323.4
8	128.1	249.8	2,245.3	338.4
9	128.7	251.0	2,251.1	347.4
10	129.1	252.2	2,255.0	353.1
11	129.4	253.5	2,257.9	357.1
12	129.7	254.7	2,260.1	360.0
13	129.9	255.9	2,262.0	362.2
14	130.1	257.1	2,263.6	364.1
15	130.3	258.3	2,265.1	365.7
16	130.5	259.5	2,266.4	367.2
17	130.7	260.8	2,267.7	368.5
18	130.9	262.0	2,268.7	369.7
Reboiler	131.3	262.0	—	370.8

Table 8. Regenerator T-101 stage profile

The sharp liquid flow jump at Stage 4 — from 113.2 to 2,142.5 kgmole/h — marks the rich amine feed entry, confirming correct feed stage placement. Vapour flow rises from 176.6 kgmole/h at Stage 1 to 370.8 kgmole/h at the reboiler as acid gas is stripped and water vapour generated during solvent descent.

5. ENERGY ANALYSIS

5.1 Energy Stream Summary

The complete energy balance for all utility streams is presented in Table 9. The reboiler is the dominant energy consumer by a wide margin, accounting for roughly 59% of total heat input.

Stream	Equipment	Duty (kJ/h)	Duty (kW)	Function
H1	E-100 pre-heater	484,800	134.7	Sour gas conditioning
QC	T-101 condenser	4,751,000	1,319.7	Regenerator overhead cooling
Qe	T-101 reboiler	14,700,000	4,083.3	Solvent regeneration (heat input)
H2	E-102 lean cooler	9,462,000	2,628.3	Lean amine cooling
P1	P-100 rich pump	11,840	3.3	Rich amine pressurisation
P2	P-101 lean pump	371,100	103.1	Lean amine circulation

Table 9. Energy stream summary

5.2 Reboiler Duty Analysis

The reboiler duty of 14,700,000 kJ/h (4,083 kW) is the single largest energy item in the process. To put this in context: approximately 75 kgmole/h of H_2S and CO_2 is recovered in the V2 overhead stream, giving a specific reboiler duty of roughly 196,000 kJ/kgmole of acid gas removed. Published benchmarks for DEA regeneration fall in the range 150,000–250,000 kJ/kgmole, which confirms the simulation is operating within physically realistic bounds.

5.3 Heat Recovery Assessment

The lean/rich cross-exchanger E-101 recovers heat from hot lean amine leaving the regenerator (DEA7 at 131.3°C) and transfers it to the rich amine feed (DEA6 reaching 98.89°C before column entry). After this exchange, the lean amine is cooled from 131.3°C to 94.80°C. The E-102 trim cooler still has to reject 9,462,000 kJ/h (2,628 kW) to cooling water — approximately 39% of the lean amine heat content — because the cross-exchange cannot close the gap entirely. That residual is the primary target for energy optimisation: a Pinch Analysis using Aspen Energy

Analyzer could identify further heat integration opportunities within the lean amine cooling train.

5.4 Pump Energy

Pump duties are comparatively negligible. P-100 (rich amine, 3.3 kW) and P-101 (lean amine, 103.1 kW) together contribute less than 3% of the reboiler energy consumption. This is expected — liquid circulation in amine treating plants is not a significant energy driver relative to the thermal regeneration duty.

5.5 Utility Consumption Summary

Table 10 gives a consolidated utility summary, separating heat input from heat rejection and mechanical power.

Utility Category	Stream(s)	Total Duty (kW)	% of Total Heat Input
Heat input (steam to reboiler)	Qe	4,083.3	100%
Heat rejection (cooling water)	QC + H2	3,948.0	—
Gas conditioning (heat)	H1	134.7	3.3%
Mechanical power (pumps)	P1 + P2	106.4	2.6%
Total heat input		4,083.3 kW	
Total heat rejection		3,948.0 kW	

Table 10. Consolidated utility consumption

Heat input (4,083 kW) and heat rejection (3,948 kW) are nearly equal, as expected for a steady-state recycle process. The difference of 135 kW corresponds to the H1 pre-heater input and minor pump mechanical additions — consistent with the first law applied to this system.

6. SENSITIVITY ANALYSIS

6.1 Rationale

A simulation that produces only a single operating point has limited engineering value beyond confirming that a design converges. Sensitivity analysis converts the model from a static snapshot into a predictive tool, showing how the process responds to deviations in key operating variables and identifying the window within which the design specification holds. For a DEA sweetening unit, lean amine circulation rate and reboiler duty have the most operational leverage — they directly control the absorption driving force and the degree of solvent regeneration respectively.

The following analysis uses the converged base case as the reference point and examines the directional responses to changes in amine circulation rate, with implications for reboiler duty and H_2S removal. Full parametric case studies with HYSYS sensitivity runner output are identified as the recommended next step, as noted in Section 8.

6.2 Effect of Lean Amine Circulation Rate

The lean amine circulation rate is the primary handle a plant operator has for controlling H_2S removal efficiency. Increasing circulation raises the liquid-to-gas (L/G) ratio in the absorber, giving more solvent contact per unit of acid gas and pushing the absorption equilibrium further toward complete removal. The trade-off is direct: a higher circulation rate increases the mass of solvent that must be heated to reboiler temperature in T-101, raising Qe proportionally.

Table 11 presents a qualitative sensitivity matrix for key process variables as a function of circulation rate deviation from the base case, based on standard DEA process engineering principles applied to this configuration.

Variable	Decrease Circulation	Base Case	Increase Circulation
L/G ratio in T-100	Decreases	1.528 mol/mol	Increases
H_2S removal efficiency	Decreases	>99.9%	Marginal gain
Absorber peak temperature	Decreases	74.93°C	Increases
Rich amine loading	Increases	High	Decreases

Variable	Decrease Circulation	Base Case	Increase Circulation
Reboiler duty Qe	Decreases	4,083 kW	Increases
Lean amine quality	Improves	Converged	Marginal change
Risk of H_2S breakthrough	Increases	None	Decreases

Table 11. Sensitivity matrix — lean amine circulation rate

The base case L/G ratio — 1,901 kgmole/h lean amine divided by 1,244 kgmole/h sour gas feed — comes to approximately 1.528 mol/mol. This falls within the typical industrial operating range of 1.2–2.5 for DEA absorbers treating feeds of this acid gas concentration. The base case is neither over-circulating nor under-circulating; it is a reasonable design point.

6.3 Effect of Reboiler Duty on Lean Amine Quality

Reboiler duty controls the degree of solvent regeneration and, in turn, the lean loading of the amine returning to the absorber. At the base case reboiler duty of 4,083 kW (14,700,000 kJ/h) and boilup ratio of 0.1954, the lean amine returning to T-100 contains 6.25 mol% DEA with residual H_2S at 0.01 mol% and CO_2 at 0.03 mol%, indicating near-complete regeneration. Table 12 describes the expected directional response to reboiler duty variation.

Variable	Reduced Qe	Base Case	Increased Qe
Reboiler temperature	Decreases	131.3°C	Increases
Boilup ratio	Decreases	0.1954	Increases
Lean amine loading	Increases	~0.01 mol% H_2S	Decreases
Absorber inlet driving force	Decreases	High	Marginal gain
H_2S removal efficiency	Decreases	>99.9%	Marginal gain
Steam consumption	Decreases	4,083 kW	Increases

Variable	Reduced Qe	Base Case	Increased Qe
Risk of solvent degradation	Lower	Nominal	Increases

Table 12. Sensitivity matrix — reboiler duty

At the base reboiler temperature of 131.3°C the solvent is well-regenerated. Reducing reboiler duty below the base case is therefore the natural direction for energy optimisation, provided lean loading stays below the threshold at which H_2S breakthrough occurs at the absorber outlet — typically 0.01–0.05 mol acid gas/mol amine for DEA systems. This trade-off defines the optimisation space for future sensitivity runner studies.

6.4 Absorber Stage Count Sensitivity

The absorber is configured with 20 equilibrium stages. The temperature profile in Table 7 shows that the steepest absorption-related temperature rise occurs between Stages 13 and 18; Stages 1 through 12 show relatively modest gradients. This suggests the upper stages are utilisation-limited. Reducing stage count to roughly 15 might achieve comparable H_2S removal at reduced column height, though it would require a higher circulation rate to maintain the same efficiency. The current 20-stage configuration provides meaningful safety margin against feed composition upsets.

6.5 Recommendations for Quantitative Sensitivity Studies

The following parametric studies are the most valuable near-term extensions of this simulation work, all executable within HYSYS using the built-in sensitivity analysis tool:

Circulation rate sweep from 1,500 to 2,500 kgmole/h in 100 kgmole/h steps, tracking H_2S outlet concentration and reboiler duty simultaneously. This generates the classic circulation rate optimum curve where the energy cost of over-circulation exceeds the diminishing return on additional removal.

Reboiler duty sweep from 3,000 kW to 5,000 kW tracking lean loading and H_2S outlet ppm, identifying the minimum reboiler duty that still meets the pipeline H_2S specification.

Feed composition upset analysis — increasing inlet H_2S from 1.74 mol% to 3.00 mol% and 5.00 mol% — to test the robustness of the base case design against richer sour gas feeds.

Together, these studies would extend the current single-point design model into a full operating envelope characterisation, substantially increasing its value as both an engineering reference and a portfolio demonstration.

7. CONCLUSION

This study has presented the complete steady-state simulation of a natural gas sweetening unit using diethanolamine (DEA) as the chemical solvent, developed in Aspen HYSYS Version 14 with the Acid Gas — Chemical Solvents thermodynamic property package. The simulation processes 1,244 kgmole/h of sour natural gas containing 1.74 mol% H_2S and 4.18 mol% CO_2 at 32.22°C and 6,893 kPa through a full absorption-regeneration loop.

The DEA sweetening unit achieves greater than 99.9% H_2S removal under base case conditions, reducing H_2S in the sweet gas product to 5.053×10^{-2} ppm — well below the 4 ppm pipeline specification. CO_2 removal exceeds 99.7%, meeting typical pipeline CO_2 limits simultaneously.

Both column operations converged fully in HYSYS and the recycle loop RCY-1 closed without manual intervention. The absorber shows a characteristic mid-column temperature bulge peaking at 74.93°C from the exothermic absorption reactions; the regenerator temperature rises monotonically from 45.05°C at the condenser to 131.3°C at the reboiler, consistent with complete thermal stripping.

The reboiler is confirmed as the dominant energy consumer at 14,700,000 kJ/h (4,083 kW), representing 100% of external heat input. The specific reboiler duty of approximately 196,000 kJ/kgmole of acid gas removed falls within the published benchmark range for DEA regeneration, validating the physical realism of the simulation. After cross-exchange in E-101, the E-102 trim cooler still rejects 9,462,000 kJ/h (2,628 kW) to cooling water, which is the main target for further heat integration.

The lean amine circulation rate of 1,901 kgmole/h gives a molar L/G ratio of 1.528 in the absorber, within the standard industrial operating range for DEA treating. The base case design is a feasible and physically realistic operating point.

The main limitations of this work are the absence of parametric sensitivity analysis using the HYSYS sensitivity runner, the simplified routing of flash drum overhead through MIX-100, and the omission of column hydraulics including flooding and weeping assessments. Future work should address these, and should integrate the lean amine cooling train with Aspen Energy Analyzer to pursue further reboiler duty reduction through systematic heat network optimisation.

Simulation files, complete stream tables, column profiles, and this report are publicly available on GitHub to support reproducibility and serve as a reference for process engineering students and practitioners undertaking similar sweetening unit design studies.

REFERENCES

[1] Kohl, A.L. and Nielsen, R.B. (1997) Gas Purification. 5th edn. Houston: Gulf Publishing Company.

[2] Kidnay, A.J., Parrish, W.R. and McCartney, D.G. (2011) Fundamentals of Natural Gas Processing. 2nd edn. Boca Raton: CRC Press.

[3] Aspen Technology Inc. (2023) Aspen HYSYS V14 User Guide. Bedford, MA: Aspen Technology Inc.

[4] Bishnoi, S. and Rochelle, G.T. (2000) 'Absorption of carbon dioxide into aqueous piperazine: reaction kinetics, mass transfer and solubility', Chemical Engineering Science, 55(22), pp. 5531–5543.

[5] Oyenekan, B.A. and Rochelle, G.T. (2006) 'Energy performance of stripper configurations for CO_2 capture by aqueous amines', Industrial and Engineering Chemistry Research, 45(8), pp. 2457–2464.

[6] Gas Processors Suppliers Association (2012) GPSA Engineering Data Book. 13th edn. Tulsa: GPSA.

[7] Coulson, J.M. and Richardson, J.F. (2002) Chemical Engineering Volume 2: Particle Technology and Separation Processes. 5th edn. Oxford: Butterworth-Heinemann.

[8] Speight, J.G. (2014) The Chemistry and Technology of Petroleum. 5th edn. Boca Raton: CRC Press.

APPENDIX A — Simulation Convergence Confirmation

Both column operations achieved full convergence in Aspen HYSYS Version 14, indicated by the green 'Converged' status bar visible in the column performance screenshots. T-100 absorber convergence was achieved with reflux ratio 1.628. T-101 regenerator convergence was achieved with reflux ratio 1.343 and boilup ratio 0.1954. The recycle block RCY-1 converged the lean amine loop to within HYSYS default tolerance without manual tear stream specification.

APPENDIX B — Thermodynamic Package Selection Justification

The Acid Gas — Chemical Solvents property package was chosen over general-purpose equations of state (Peng-Robinson, SRK) because amine-acid gas systems exhibit strong non-ideal behaviour arising from chemical reactions in the liquid phase. General EOS models do not account for the reversible carbamate and bicarbonate formation reactions between DEA and H_2S/CO_2, leading to systematic errors in predicted acid gas solubility and column profiles. The Kent-Eisenberg framework, as implemented in HYSYS, was specifically developed and validated against industrial amine plant data for this class of system. It is the recommended property package in the HYSYS documentation for all amine treating simulations.

APPENDIX C — Nomenclature

Symbol	Definition	Unit
T	Temperature	°C
P	Pressure	kPa
F	Molar flow rate	kgmole/h
$\dot{m}$	Mass flow rate	kg/h
Q	Heat duty	kJ/h or kW
L/G	Liquid-to-gas molar ratio	mol/mol
DEA	Diethanolamine	—
H_2S	Hydrogen sulphide	—
CO_2	Carbon dioxide	—
Qe	Reboiler duty	kJ/h
QC	Condenser duty	kJ/h
RR	Reflux ratio	—
BR	Boilup ratio	—
ppm	Parts per million (molar)	mol/mol × 10^6
EOS	Equation of state	—
PFD	Process flow diagram	—

Table C1. Nomenclature